Mastering the Science (and Art) of Yard Waste Composting

Composting large volumes of residential yard waste into quality products without odor problems is part science and part art. Here are some tips from one of the new masters of the art, based on the successful first few years of experience at a 100-tpd operation in Pierce County, Washington.

By Michael E. Hilts

Almost any composting system can produce quality, saleable products without creating major odor problems if the system designer and operators understand the air and moisture demands of the system. That assertion comes from the operator of one of the nation's most successful and high-tech yard waste composting systems.

The system was designed, built, and is operated by Land Recovery Inc. for Pierce County, Washington. And, while the $3.5 million may sound like a lot of money to spend establishing a yard waste processing facility, the project has operated as planned since May 1992, handling up to 33,000 tons of yard waste a year.

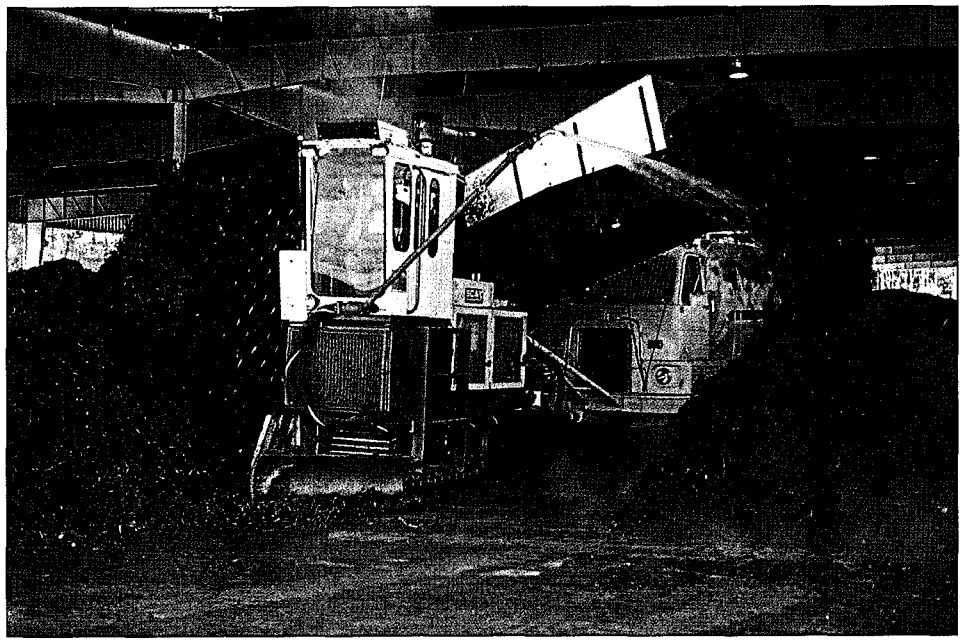

A SCAT turner modified with a side discharge conveyor moves and waters the compost in the same pass. Water is sprayed into the pile being rebuilt from a 10,000 gallon tank towed behind the turner—each time the compost is turned. (photo courtesy Land Recovery, Inc.)

The evidence of success? In three years of operation, the facility has received only six complaints, total, about odor and/or noise—an average of only two per year. Last year, only one odor complaint was logged. In addition, the project sells a variety of its finished compost products, through brokers, for about $8 to $20 per yard, and is about to start bagging the material so it can be sold to consumers in retail outlets. And, the county is pleased enough to have begun exploring options to add a second, similar project elsewhere in the county. The county also recently renewed LRI's contract to operate the composting facility for several more years.

Two basic elements are responsible for the plant's success, according to Land Recovery's plant manager, Jeff Gage. The first is design of the system to properly manage the science of composting. The second element is where the art is required: operating the system.

Mike Hilts is Editor of Solid Waste Technologies. *7221 W. 79th St., Overland Park, KS 66204; (913) 642-6032. Jeff Gage can be contacted at Land Recovery, Inc., 17925 Meridian Street E, Puyallup, WA 98373; (206) 857-2075. Rick Johnston, solid waste analyst for Pierce County, can be contacted at (206) 593-4050.*

System Design

The most critical aspect of the system design, according to Gage, is setting up for proper management of the compost feedstock. This entails ways to manage moisture levels and mixing of the material—which most composting systems accomplish. But the Pierce County facility system goes beyond typical yard waste composting systems by also ensuring for continuous aeration of the feedstock.

"Every composting failure or success I had seen was traceable to the improper or proper application and management of air. So, we thoroughly examined every kind of option to provide the right air

flow to the compost." The effort included extra expense on design and engineering, and computer analysis of six options and lots of variables. It cost maybe 5 to 10 percent more, but we felt it would be worth it."

The effort led to construction of a 30,000 square foot concrete pad with an aeration piping system underneath for active composting. Risers deliver air from the pipe system to more than 900 holes on the surface of the concrete floor. The curing pad, almost equal in size, is also aerated using pipes laid on top of the asphalt pad. They would have used a similar fixed, in-floor system, except they had difficulty installing risers in the asphalt pavement. The company plans to retrofit later by pouring concrete channels in the asphalt pad.

Aeration is needed during composting to provide oxygen for microbial activity and to remove excess heat. Aeration also reduces the moisture content of the resulting product to an acceptable level for mechanical screening—between 35 and 40 percent. Cooling the compost pile requires the greatest volume of aeration air. Consequently, aeration systems are designed primarily to meet this aeration demand.

The Pierce County aeration system was a collaborative effort of personnel in three firms—LRI's Gage, plus engineers at EMCON Northwest and E&A Environmental. LRI designed the self-clearing orifice, material characteristics, and overall flow design. EMCON engineered the system for uniform air delivery system, design for positive and negative draft, and line flushing capability. E&A Environmental provided the microbial activity level/heat generation rate, and biofilter design parameters. The Pierce County system incorporated the following features:

—*Multiple Aeration Zones.* The amount of oxygen needed varies as the compost material matures. The oxygen demand drops significantly after the first few weeks of composting. For this reason, the composting floor was divided into multiple aeration zones. (See Figure 1). The prepared feedstock is built into piles 7 to 8 feet high, 10 feet wide at the base, and up to 200 feet long on the concrete compost pad. Then, when material matures, the entire pile is turned and watered, and moved laterally using a modified SCAT turner with a side discharge conveyor. In Figure 1, the material enters at the east and is moved westwardly through the system. This creates room for a new pile of fresh feedstock at one end of the system, while at the other end of the pad, a completed pile of compost is ready to move to curing stages.

The freshest material is placed in either Zone 1 or Zone 2, and remains there for the first ten days. The aeration rate in these zones is 1.25 cubic feet per minute (cfm) per square foot of aeration floor—about 2,000 cubic feet per hour per dry ton of compost. Compost is moved westward toward secondary zones (e.g., Zone 4 for material from Zone 2). Here, the aeration rate is 0.63 cfm per square foot of aeration floor.

—*Fixed, Under-Floor Aeration Pipes.* A common means of installing compost aeration piping is to lay it in channels cast into a concrete floor. Once laid in the channels, the piping is covered with gravel, a steel grate, or both, to provide protection from equipment loads. Instead of using channels, Pierce County elected to cast the pipe permanently below the concrete floor. Such a system requires risers or vertical nozzles to deliver the air from the pipe to orifices at the top of the floor.

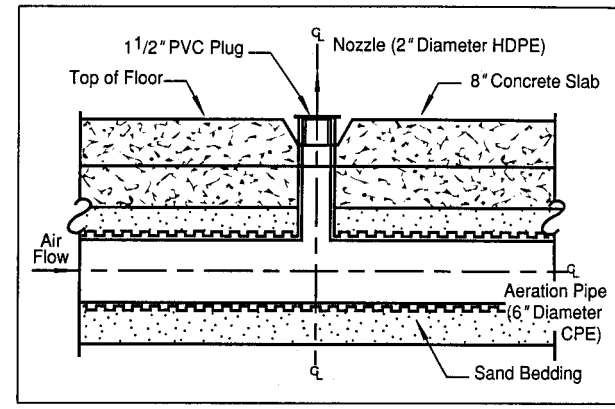

Figure 2: Cross section drawing of the in-floor aeration nozzle. The active compost floor has more than 900 such nozzles.

Pierce County selected the under-floor arrangement. Figure 2 shows a typical cross section through an aeration nozzle. The top of the riser or nozzle is set approximately 1/4 to 1/2 of an inch below the surface of the concrete floor to allow the unimpeded travel of trucks, windrow turners, and front end loaders.

One reason Pierce County opted for the under-floor arrangement was to minimize cost. Channel systems require more concrete form work and steel grating, thus adding to the expense, even though they may have lower maintenance costs. The savings were approximately $40 per foot of sparger length. Another reason the county selected this aeration system was that it can deliver air more uniformly into the compost mass. Where channel systems deliver air below and outside the compost pile, the orifice at the surface of the floor delivers air directly into the compost pile. And, if the compost material is porous enough, the cone of influence will be well into the pile.

The objective of either system is to create a uniform air flow along the entire length of the perforated aeration pipe, or

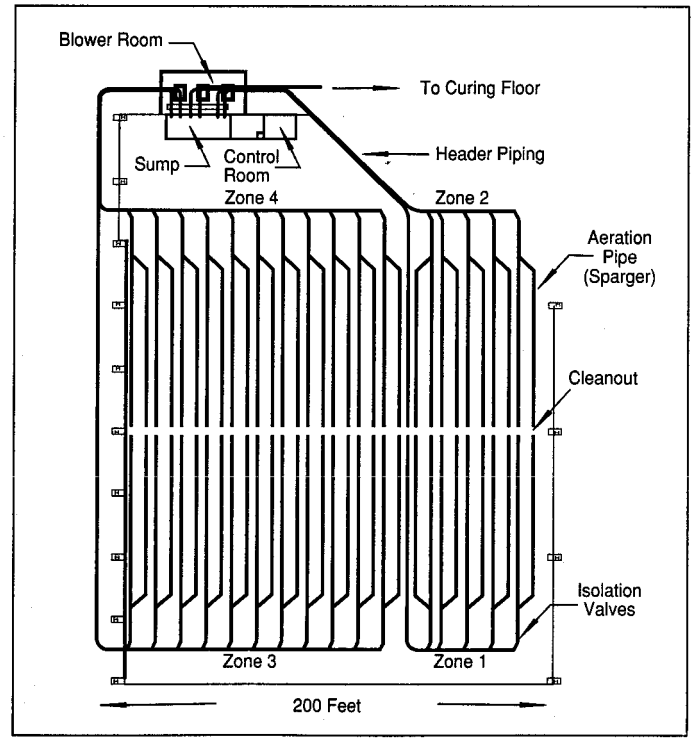

Figure 1: Floor plan/aeration pipe system layout of the active composting area at the Pierce County, Washington, Composting Facility. Fresh yard waste is placed in Zone 1 or 2 and is moved laterally westward as the compost matures.

sparger. With spargers 80 feet long, larger blowers were needed. Also, instead of a more common 3-foot spacing between risers, Pierce County used 6-foot spacing. This saved money by reducing the number of risers that had to be welded onto the sparger. It also increased the air velocity at each orifice. The resulting air flow—of about 90 mph at 14 inches of water column pressure—is ample to prevent compost from clogging the opening. Most of the large sticks or rocks that get into the hole will fall through to the bottom of the pipe; if not, operators can manually unplug the few blocked holes when the pile is turned and moved laterally. "By visual inspection after each turn, we know that we have about 95 to 98 percent of the holes open at any time." The air flow is also strong enough to deliver air throughout a 10-foot tall, or taller, pile.

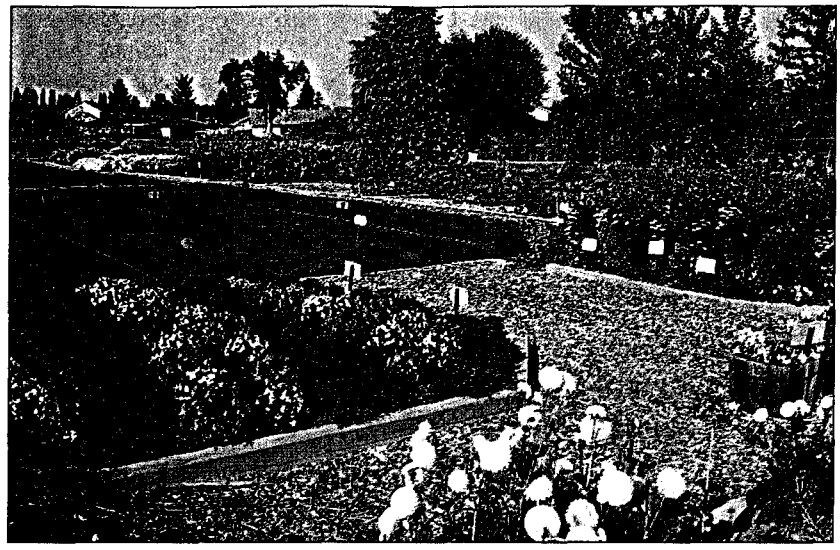

Begonia bed at Washington State University benefits from one of the compost products from Pierce County's facility, called PREP. The finely screened compost was blended into a top dressing that the University tested. (photo courtesy EMCON Northwest)

The aeration system has performed successfully in its first three years. However, as with all designs, there is room for improvement. One suggested modification to the original design would be to anchor the nozzles into the concrete, rather than only welding them to the sparger. This would prevent equipment loads from punching the nozzle downward, through the aeration pipe and breaking the riser weld. This has occurred in a couple dozen locations, but has not seriously affect the system performance. The broken nozzles have been lifted back into place and still deliver air without significant leaking or loss of pressure.

—*Flushable Aeration Piping.* Inability to clean the aeration piping at other facilities has resulted in reduced air flow, and in at least one instance, development of anaerobic conditions within the piping itself. It also has led to high maintenance costs, from having to rip out grates and gravel to access blocked piping.

To avoid similar troubles, the Pierce County facility's piping was designed for easy cleaning. The end of each sparger, at the center of the active compost pad, is fitted with a larger cleanout orifice. This allows operators access to flush the system with a hose. Water sprayed into this end drains toward the isolation valve for each set of two spargers. The header pipe for each of the four zones is sloped to a cleanout pit, from which the flushed material is removed. LRI cleans the piping system about every three months.

—*Forced and Induced Draft Capability.* The system combines both forced and induced draft capability so operators could push or pull air through the compost as required. Alternating between the two modes of operation aids to prevent overdrying of the compost and enhances the distribution of air. Operators can use the "pull" mode, in particular, to help prevent odors from escaping when odors occur. Air collected during induced draft operation would be directed to a biofilter.

—*Centrally Located Blowers.* Rather than using several small horsepower blowers common in many facilities, the design called for a few large horsepower blowers. This allowed controlling the air distribution for the whole system from a central location, reducing electricity costs and maintenance issues associated with multiple equipment. Another benefit from a central location for the blowers was that it would allow for simpler conversion to an automatic and remote control system. The automated system, slated for installation in 1995, will record temperatures and adjust air flow when required to raise or lower the temperature. Automation will also include alternating between pushing and pulling the air to maintain the compost pile temperature. "Our objective is to keep the temperature at the top and the bottom of the pile within 10 degrees (Fahrenheit)," says Gage. "Now, we have about a 40-degree differential. Auto-

Pierce County Composting Facility

Purdy, Washington
Owner: Pierce County
Operator: Land Recovery, Inc.
Engineer: Emcon Northwest
Capacity: 125 tpd (peak), 80 tpd (avg.)

Collection: About 75 to 80% of material is collected at curbside every two weeks by haulers throughout the county. The haulers deliver the yard waste to LRI's landfill in Puyallup, Washington, about 40 minutes from the compost facility in Purdy.

Feedstock & prep: Mostly grass (> 90%), so it is mixed with ground woody material and some finished compost, to help maintain the porosity of the mix. The amount of bulking material is increased if the incoming material is odorous. Woody material is sized in a vertical feed, fixed-blade Falcon grinder that has a grate with 4-inch openings.

Aeration piping: Manifold 6 to 16" diameter HDPE; sparger 6" HDPE with smooth-wall inner liner; riser 2" HDPE (shop-welded to the sparger)

Blowers: Three 50-hp, centrifugal blowers (New York Blower Co.), each capable of delivering 6,000 cfm at 30 inches water column pressure.

Screening/Refining Equipment: Jeffries Trommel.

mation will allow us to pull air for two to five minutes in every 15 minutes of operation, and this should bring us much greater temperature control."

Lessons in the Art of Operating

Land Recovery operates its compost system with some simple, important philosophies. All relate to the basic science, but the operator contends it is an art to keep the scientific system in balance. Here are a few of LRI's thoughts about its art:

Intensive Management Early. Gage says LRI's most important philosophy is to expedite the control of the feedstock material. "We don't let the stuff sit for long before processing it. We try to get material into aerated piles during the first half hour after we get it."

Much of the decomposition—50 to 60 percent—will occur during the first week or ten days of a total 90 day process (including curing). If the material is managed intensely during these early days, according to Gage, then management can be much less intensive later without detrimental influence on the product quality. However, if proper composting conditions are not achieved early, the total process can be slowed by as much as several weeks or months. More important, if the operator misses the opportunity to manage actively in the early stages, some material will go anaerobic. This can lead to the formation of fatty acids that should be broken down before the compost product is used as a soil amendment. It also increases the potential for odor generation. Then, when turning is required, operator may have to wait for the correct wind conditions (to avoid upsetting neighbors), further slowing the composting process.

Small Piles. In systems that have to handle large volumes, there is a tendency to build larger piles or windrows. This can create difficulty in controlling the pile temperature and aerobic activity. "We can produce very acceptable, mature, product in three months, if we can keep pile heights low," Gage says, and also adds, "Small piles don't go anaerobic as easily."

When the waste material is fresh, LRI operators try to limit height to 6 or 7 feet. Even though the system is designed to aerate a pile 13 or 14 feet tall, Gage says it is very tough to control temperature at the top of the pile. The optimum temperature for composting is between 113 and 130°F, a range where micro-organisms are most active. "Some compost system managers allow the compost piles to reach temperatures between 140 and 160°F," Gage says, "a range where micro-organisms are stressed and less active."

Thermal death occurs at 160°F, a temperature that kills most micro-organisms, and is truly "out of control" for composting.

Keep it Porous. Maintaining the porosity of the feedstock, so air has good access to the biomass, is important. In fact, LRI operators feel porosity of the feedstock is more important than the carbon:nitrogen (C:N) ratios. They don't routinely test for C:N ratio of the material they receive, which ranges from about 14:1 during grass season, to 45:1 during winter. Instead, they make a rough mix of five loader buckets of grass to one to two buckets of woody bulking agent. After feedstock preparation, operators monitor the oxygen level and attempt to maintain it at a minimum of 15 percent.

Moisture control. In the Pierce County compost operation, target moisture content for the compost is above 50 percent. Since the yard waste it receives contains

about 35 to 40 percent moisture, the operator must add considerable water in its process. Water is sprayed from a 10,000 gallon tank towed behind the turner—each time the compost is turned. System planners originally figured they would use about 15 gallons per cubic yard of feedstock. Instead, they're using about 50 gallons per yard, and that elevates the moisture to only about 40 to 45 percent.

Frequent Turning. Operators turn the compost with a SCAT mechanical turner at least once a week and at most once every 3 or 4 days. The system is similar to a enclosed, concrete bay system, where compost is both turned and moved along the bay as it matures. "Except, we've gotten rid of the walls." We don't have to lift the compost over walls. And, if the turner breaks down, we can use a loader to move the material laterally," Gage says.

But the SCAT has provided solid service, Gage says. The operator notes there has been very little wear on the SCAT, even though they have had an aggressive turning schedule. They've operated for more than 2,000 hours, mixing 1,800 cubic yards of material per hour, before having to change the hammers on the machine. The SCAT system has a characteristically slower tip speed and less aggressive knife action, thus minimizing wear.

Quality Products

The result of both a soundly designed compost system and an artfully operated system are quality, useful compost products. Pierce County's system produces four products: two compost grades (fine and coarse), a grade of mulch, and a hog fuel. The finished compost is screened in a 30 foot long, two-stage trommel with an 8-foot diameter opening. The first stage has 5/16-inch openings and the second has 7/16-inch openings.

The fine compost, screened in the first stage, is used up to about 30 percent of soil blends for top dressing, and turf development projects. Soon, a good percentage of it will be used to make a bagged product, called PREP, which will be sold to homeowners for about $20 per cubic yard. This compares to current revenues of $13 per yard for topsoil material sold in bulk to volume users. The fine compost meets limits for Washington State's AA classification. The limits are similar to, but more stringent than, the EPA 503 standards for sludge compost. AA class compost has unrestricted use.

The coarse compost, screened product from the second stage, also is used in top spoil blends in higher percentages, and also incorporated directly into soils. The mulch is suitable for a bark substitute. Customers prefer it to bark, since it doesn't have fines that clog, thus encouraging growth. The operation sells it for about $9 to $10 per cubic yard.

The trommel's discharge is ground to 3-inch nominal size. This product is then screened to remove fines and added to woody wastes shredded during compost feedstock preparation. It is sold as hog fuel. Two conveyors that feed the trommel are inclined at 27 degrees, instead of the specified 25 degrees. The slight additional slope tumbles rocks backwards and keeps them from entering the trommel, reducing the stone content of the hog fuel and reducing wear on the grinder.

Conclusion

The success of the Pierce County yard waste composting facility has drawn visits from around the world, and facilities fashioned after this one are being built or planned for locations in Australia, South Africa, and Japan. It deserves continued attention and a closer look from community solid waste planners throughout North America as well.